INSTRUCTIONS - Heating Cable Repair Kit - KIT-SP2

Warnings and cautions

Risks of electrical shocks and fire

For safe installation and efficient performance of this system, read the instruction manual thoroughly and keep it handy.

- Where applicable, installation must meet requirements of the following codes:
  - Canadian Electrical Code (CSA C22.1 Part 1 et C22.2 no. 130);
  - National Electrical Code (NFPA 70);
  - Any other applicable local and/or national code.

- Where required by law, this product must be installed by a qualified person.

- To prevent any possibility of electrical shocks, the power supply must be turned off before handling the heating cables.

- Always follow the manufacturer's operating instructions for the tools used.

- When using a hot air gun, always keep the tip moving to avoid overheating of the heat shrink tubes and damage components. Components other than heat shrink tubes must never be heated. Vapours created during tube heating heat shrinks can cause irritation; take proper precautions and ventilate the room.

- This repair kit and installation instructions are provided to help repair a damaged cable. There is no guarantee of the good system operation following repair.

- It is strongly recommended that an experienced flooring installer remove the flooring and its adhesive.
  Important: Be very careful when this is done to avoid damaging the heating cables.

- Do not use this repair kit to join the various heating cables together. The kit is only intended to repair a heated cable only.

- Heating cable repair is a specialized procedure.

- Only qualified personnel who have completed the web training (section tools), possessing the necessary skills, are authorized to repair heating cables.

- **The repair must not reduce the original length of the heating cable by more than 3% or by 3% of the original resistance to installation.**
  If this is the case, the heating cable is out of order and must be replaced.

Two repair methods are possible

Choose the method that is best for the installation.

Jumper splice method:
This method is used when the cable is damaged over a longer distance and the direct joint option is not possible.
This also results in a section of cable that will not have heating.

Direct splice:
This method is used when the cable is damaged only for a short distance and both parts of the same heater cable can be joined together.
It also results in the best heating uniformity.

Material and tools needed:

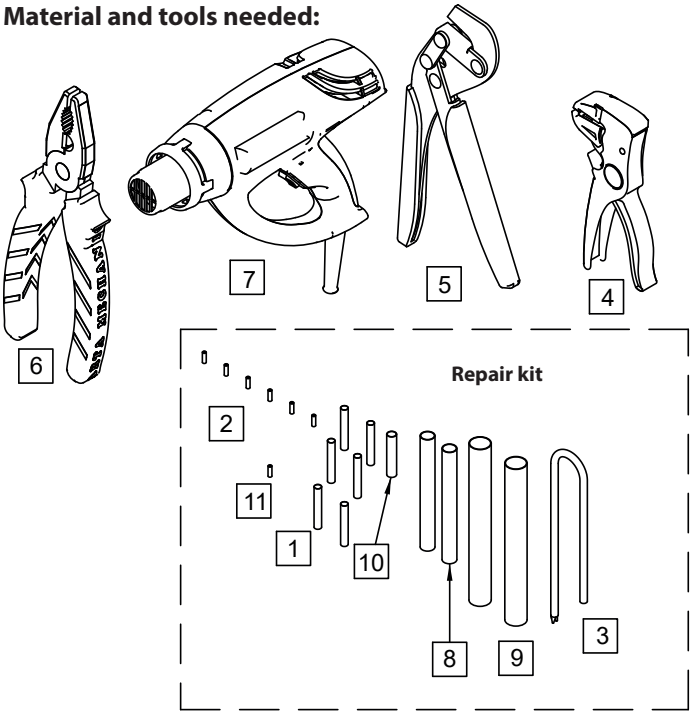

No	Description	Qty
1	Heat shrink tube 6 X 40 mm	6
2	Mechanical connector 4 X 15 mm	6
3	Jumper splice	1
4	Wire stripper	1
5	Crimping tool	1
6	Electrician's pliers	1
7	Hot air gun	1
8	Heat shrink tube 12 X 110 mm	2
9	Heat shrink tube 18 X 155 mm	2
10	Heat shrink tube 8 X 40 mm	1
11	Mechanical connector 3 X 10 mm	1

Verification tools required:

Multimeter

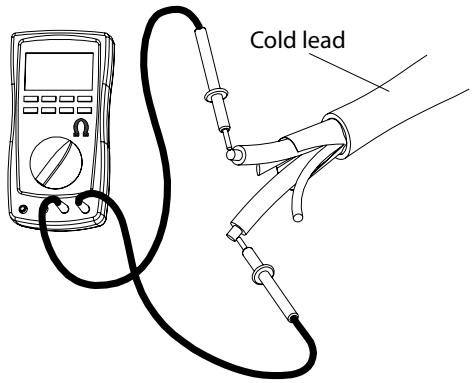

Megger type isolation resistance test

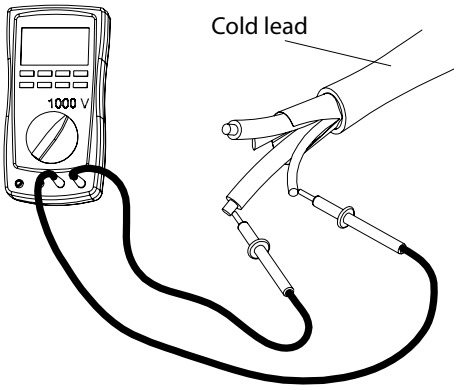

Risks of electrical shocks and fire

1. Make sure the power is off!

1.1 Before starting the repair, the defect should be localized.

1.2 Following this, the heating cable must be made accessible.
For example: The cable section to repair must be free of concrete, flooring or glue.

.

The clearance must be large enough to permit repair as per the instruction.

2. Procedure for repair - Jumper splice method.

2.1 Cut the damaged section and insert the 12 x 110 mm (1/2" x 4 3/8") and 18 x 155 mm (11/16" x 6") heat shrink tube into one of the heater cables.

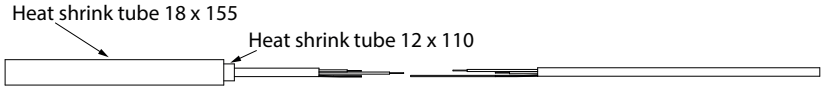

2.2 Strip the end.

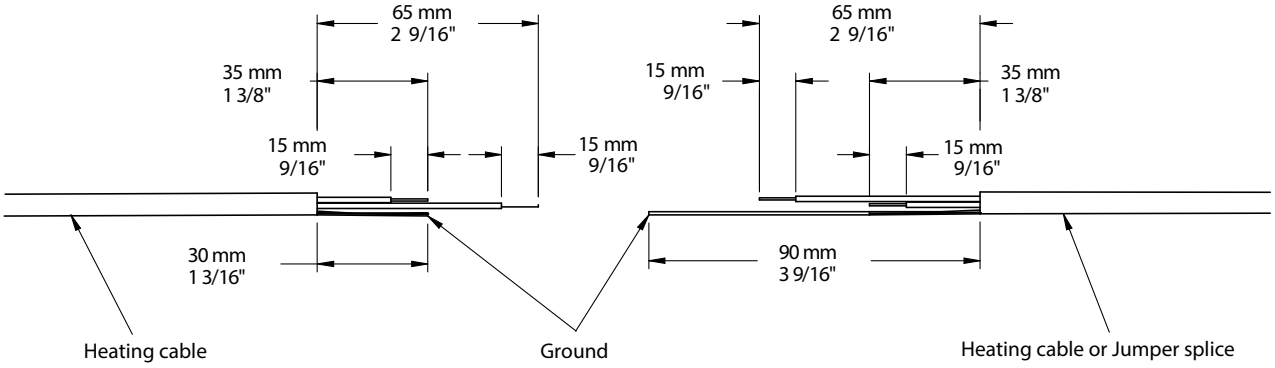

2.3 Insert the 6 x 40 mm into the earlier ground section cut at 90 mm (3 9/16").

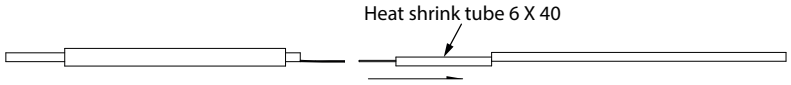

2.4 Insert the 4 x 15 mechanical connector into the 30 mm (1 3/16") ground and then insert the 90 mm (3 9/16") ground into the mechanical connector, the 2 wires should overlap by 30 mm (1 3/16") and then crimp the mechanical connector to ensure that the mechanical connection is tight.

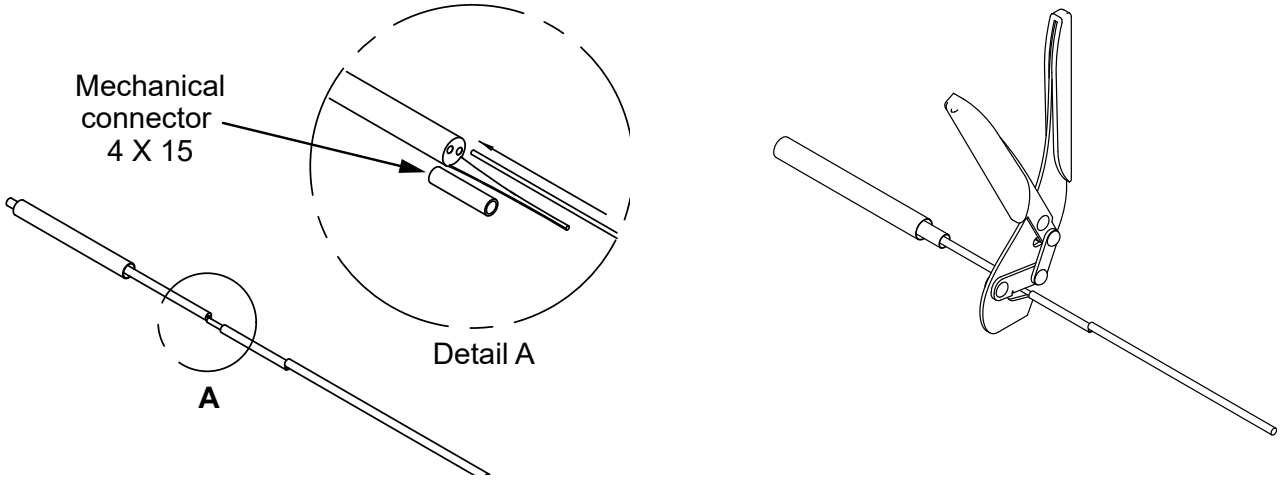

2.5 Insert the 6 x 40 mm (1 9/16") heat shrink tube over the connection so that it is completely over 30 mm (1 3/16") ground. Afterwards, heat the tube along its entire length with a hot air gun (do not overheat it), make sure the tube has shrunk enough to see the sealant coming out of both sides.

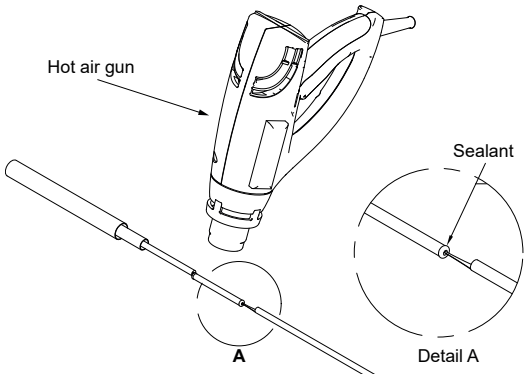

2.6 Insert the 6 x 40 mm heat shrink tube into one of the 65 mm (2 9/16") cut wires.

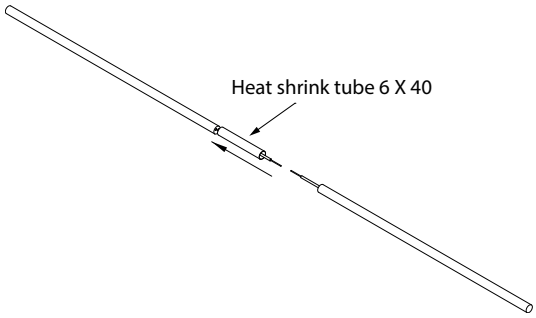

2.7 Insert the 4 x 15 mechanical connector into the 35 mm (1 3/8") wire and then insert the 65 mm (2 9/16") wire into the mechanical connector, the 2 wires should overlap by 15 mm (9/16") and then crimp the mechanical connector to ensure the mechanical connection is tight.

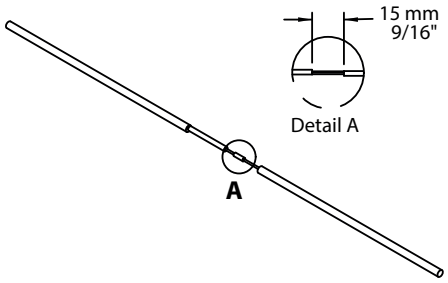

2.8 Insert the 6 x 40 mm heat shrink tube over the connection and make sure it is centered to the mechanical connection. Then heat the entire length of the tube with a hot air gun (do not overheat it), make sure the tube has shrunk enough to see the sealant coming out of both sides.

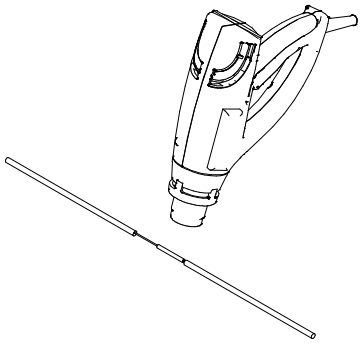

2.9 Repeat steps 2.6 to 2.8 for the other 35 mm (1 3/8") wire.

3. When all 3 assemblies are complete, insert the 12 x 110 mm tube over the connections and center it in relation to the 2 heating cables.

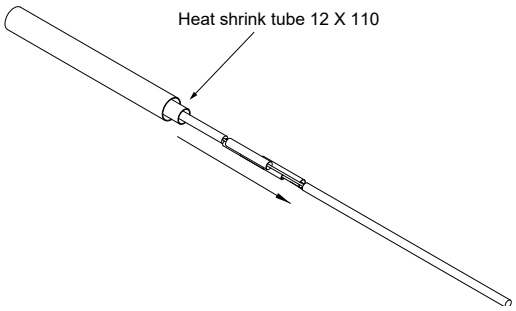

3.1 Heat the entire length of the heat shrink tube with a hot air gun (do not overheat it), make sure the tube has shrunk enough to see the sealant coming out of both sides.

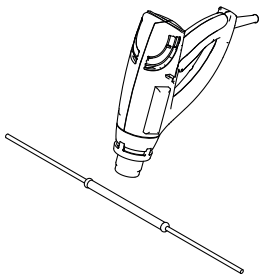

3.2 Then insert the 18 x 155 mm tube over the 12 x 110 mm tube and center it well and heat the heat shrink tube along its entire length with a hot air gun (do not overheat it), make sure the tube has shrunk enough to see the sealant coming out of both sides.

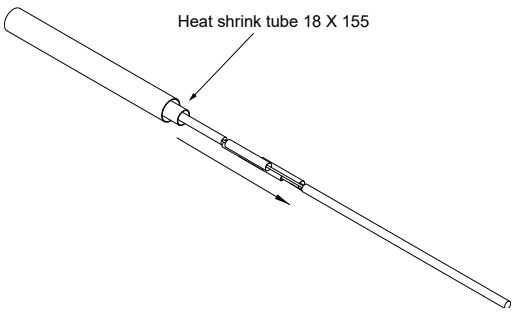

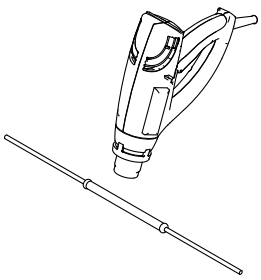

3.3 Repeat the same steps 2.3 to 3.2 for connecting the other extremity of the jumper splice.

4. Procedure for repair - Direct splice method.

4.1 Repeat steps 2 to 3.2 using the 2 parts of existing heating cables to be repaired

5. Termination connection repair.

5.1 Strip the 2 wires.

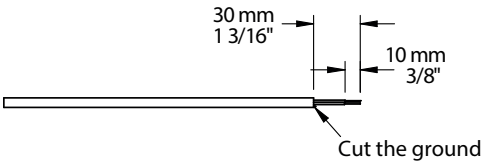

5.2 Insert the 3 x 10 mechanical connector into the stripped wires and then crimp the mechanical connector to ensure the mechanical connection is tight (wires can be twisted).

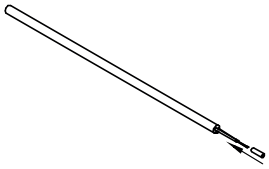

5.3 Insert the 8 x 40 mm heat shrink tube over the 2 wires and the 5 mm (3/16”) overlaps the outer insulation of the heating cable.

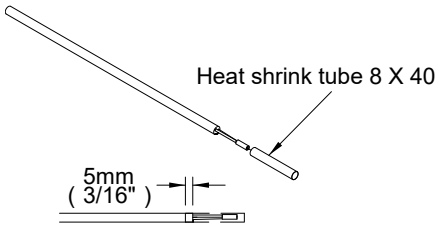

5.4 Heat the entire length of the heat shrink tube with a hot air gun (do not overheat it), make sure the tube has shrunk enough to see the sealant coming out of both sides.

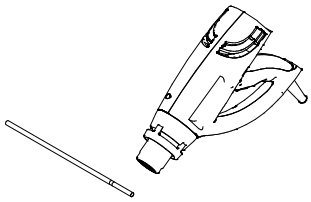

5.5 Insert the 12 x 110 mm heat shrink tube over the 8 x 40 mm heat shrink tube and overlap of 20 mm.

5.6 Heat the entire length of the heat shrink tube with a hot air gun (do not overheat it) and while the tube is still hot, gently crush the end of the tube over 7 mm (5/16”) with electrician’s pliers until the heat shrink tube is cold. The tube must remain visibly sealed when the pliers are removed. If the tube does not remain sealed, repeat this step.

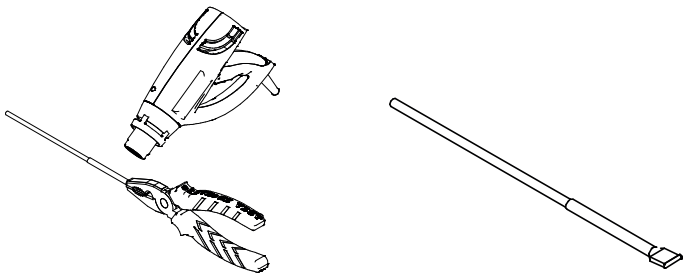

6. Repair test.

6.1 Use a calibrated digital multimeter to measure the heater resistance.
- Measure the resistance at the strip end of the cold lead between the two power conductors.
- Note the result.

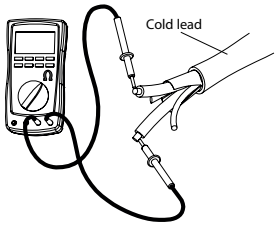

6.2 Check the integrity of the heating cable by comparing the measured value to the value written on the label on the cold lead.
"If the value read is below 3% of the value on the installation label, the cable will need to be rechecked or replaced with a new heating cable."
- Perform a "Megger" type test to verify the insulation resistance of the repair at 1000 Volts DC.
- If the result is less than 50 Mohms either the repair is defective or there is another defect in the system .

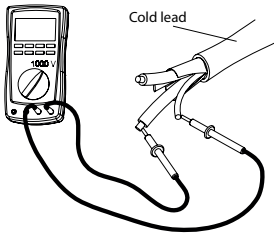

CAUTION! Dangerous Test

7. Repair log.

7.1 When the repair is successfully completed, write on the label (included in the kit) the required information.

VEUILLEZ APPOSER CETTE ÉTIQUETTE À CÔTÉ DE L'ÉTIQUETTE SIGNALITIQUE OU SUR LE PANNEAU DE DISTRIBUTION / PLEASE PLACE THIS LABEL NEXT TO THE RATING LABEL OR ON THE DISTRIBUTION PANEL

EMPLACEMENT / LOCATION	
NUMÉRO DE MODÈLE DU CÂBLE / CABLE MODEL NUMBER	
RÉSISTANCE / RESISTANCE (OHMS)	
AMPÉRAGE / AMPERAGE (AMPS)	
NOUVELLE LONGUEUR DU CÂBLE / NEW CABLE LENGTH	
DATE DE LA RÉPARATION / DATE OF REPAIR	
NOM DU TECHNICIEN / TECHNICIAN NAME	
COMPAGNIE / COMPANY	

7.2 Please place this label next to the rating label or on the dsitribution panel of the heating cable that has been repaired.

7.3 It is necessary for the owner to have a repair log in case of future repairs.

7.4 In the repair kit there are 2 labels, if the first one has not been affixed to the distribution panel, it is the owner's responsibility to either have his own repaid log or to apply the 2nd label with his information on the distribution panel of the heating cable that has been repaired.

7.5 After repair, reinstall the floor covering in conformance with the heating cable installation instructions.